SR-65

BLUE TECH

soilmec

Drilling and Foundation Equipment

What Drillers Want!

The SR-65 Evo has been upgraded to the Blue Tech version which includes a redesigned operator cabin, new hydraulics and mechanics for an improved efficiency.

Designed around a new energy-saving architecture, the next generation SR-65 Blue Tech is a rig that meets the demands of productivity, flexibility and functionality across all drilling setups and technologies.

Higher performance

- Automatic control of rotary motors
- More power on the tool
- + 8% Diesel engine power available

More efficient

- Optimized lines to the rotary for cutting power loss
- Diesel engine – Auto low idle control for fuel saving
- Main pump with Load Sensing system
- - 5% fuel consumption

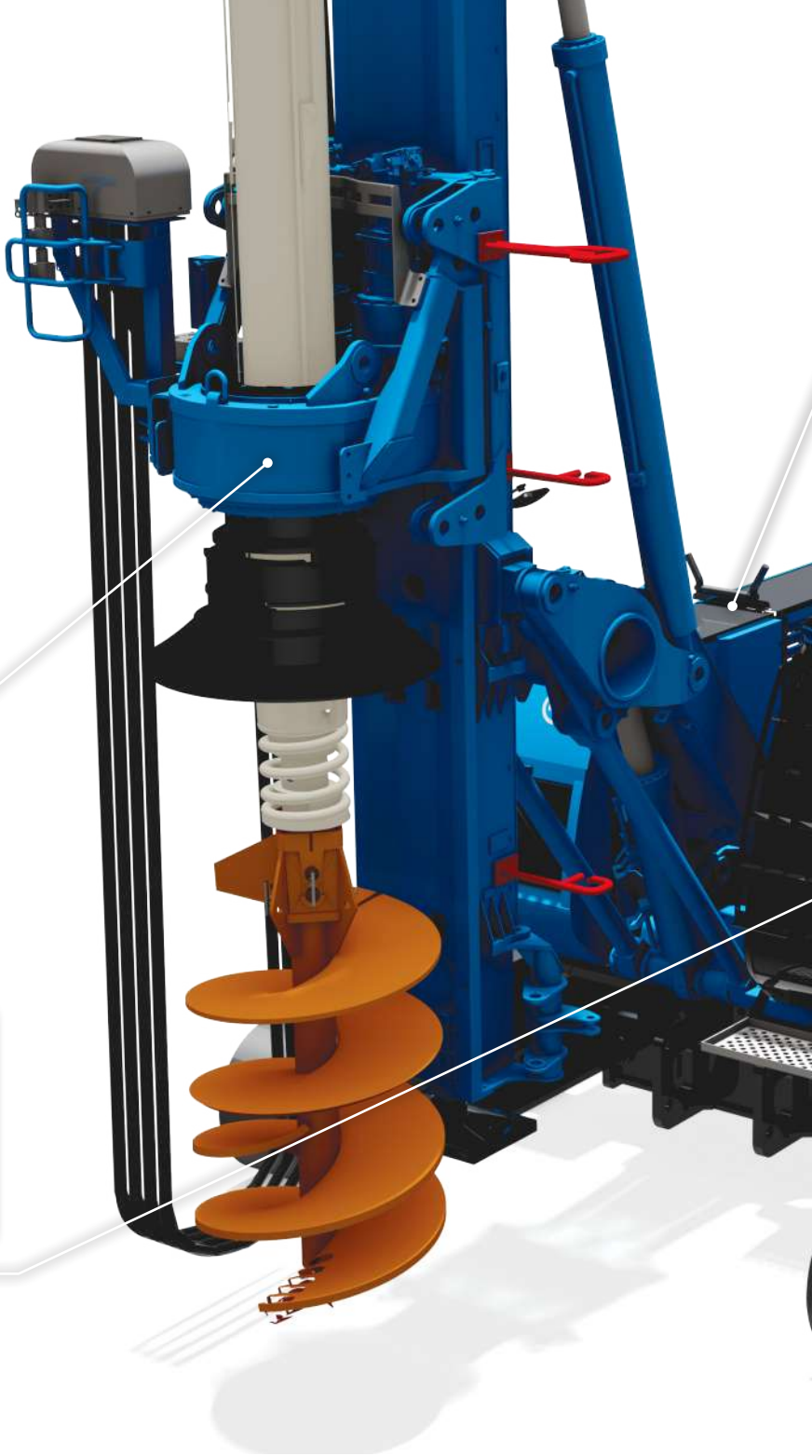

Focus on

Truly multipurpose

- 5 technologies: LDP, CFA, DP/TCT, TJ and VDW
- Many versions: WCS, CCS, Segmental Mast, LHR, Quick Change, 4-lines pull and the latest ETCW Direct pull

Environment-friendly

- Complies with the most stringent emission rules
- Lower CO2 emissions
- Improved combustion and cooling efficiency
- Noise reduction

Proven ergonomics

Sliding door, fully adjustable pneumatic suspension seat, new joysticks and keybords

Great visibility

Polycarbonate roof and stratified front glass allow to work without protection grids, LED lights with anti-glare technology and CCTV camera system with dedicated 7” display

Most comfortable

Powerful HVAC system with recirculating air, USB port, USB or wireless phone charger mount, locked glove boxes (one is air-conditioned), a large compartment for placing helmet and jacket, two dual cupholders and a file folder

Always connected!

DMS On Board 4.0
DMS PC for a complete production analysis
DMS Manager a cloud service for superior fleet supervision

Built for outstanding Segmental Casing performance

- Long casing elements can be used to reduce handling time and increase the productivity
- High torque to drill deeper and bigger piles
- Extraordinary and effective pull-up force to extract heavier casing
- Fast drilling and high speed discharging

SR-65 Blue Tech
One rig, many opportunities

- Plug & Play kits for a faster conversion to any technology
- Machine settings performed by DMS on board
- Direct Quick Change version for a quicker conversion to CFA/DP/TCT/TJ technologies
- Unified cathead in CCS and WCS and CFA Quick Change
- Same foot element for both kelly & CFA
- Modular mast to set the machine in LHR configuration by simply removing the upper element

12 versions

5 technologies

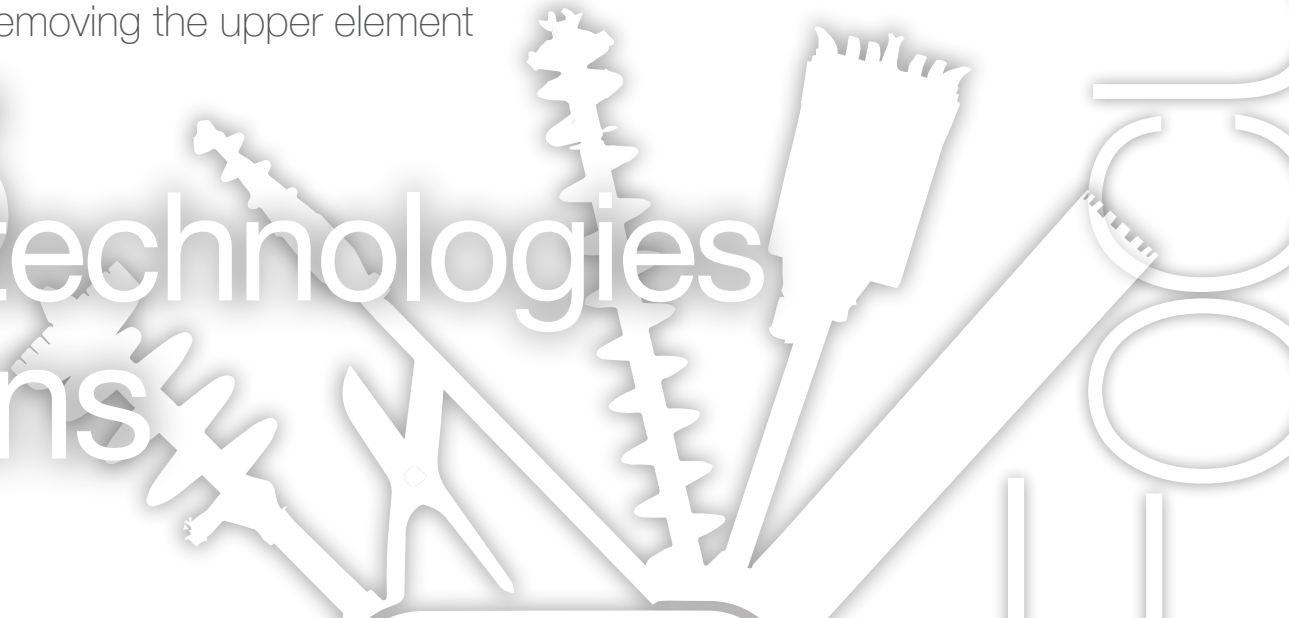

SR-65 Blue Tech

Your safety is our priority

- Improved direct visibility on right-side through new compact hydraulic compartment
- Camera systems for 360° visibility, giving a clear surround view of the rig
- Powerful led lights with antiglare technology
- Cab platform access with handrails
- Lowest noise emission in its segment
- Radio remote control for safer load/unload and tramming operations
- Automatic white sound alarm during rig travelling and turret rotation
- Warning system for sleeve extension coupling for CFA / DP / TJ technologies (patent pending).

SR-65 Blue Tech

The answer to all your job site needs

- Main winch rope anti-slack. Managed by DMS, the system indicates when to slow down the kelly bar descent in order to avoid collision with the hole bottom and excessive rope unwinding for longer rope operation life
- Automatic Mast Raising (Patented). Automatic tensioning of main and service winch ropes during mast raising and boom adjustment to ease the operations during drilling/transport/maintenance phases
- Automatic return to centre hole. Designed to speed up the discharging phase. Very high slewing precision, for a perfect centering of the casing of the kelly bar. One word: faster cycle
- Locking kelly bar visualization system. Real time display of locking connection area to simplify the operator job and to protect the rig against wearing and tearing
- CFA Autodrilling. An automatic device for CFA mode to control and to optimize the drilling parameters
- CFA Autorotary (Rotary Revolutions Speed Control). The operator can activate this function by a dedicated pedal or through joystick
- Drilling axis variation. Easy and fast conversion
- Potentiometers main functions in order to manually set up of the drilling parameters
- Easy maintenance, automatic lubrication of all the necessary greasing points in kelly and CFA versions
- Auxiliary cable support device, easily accessible by the banksman
- Rotary cradle sliding guide replaceable w/o dismounting the rotary

Focus on

Unique.
GRUBER
43
GRUBER
LOGISTICS
GRUBER

SR-65 Blue Tech

Transport and start up never been so smart

Less than 30 minutes from truck to piling

Quick and efficient mobilization

Rapid start up on job site

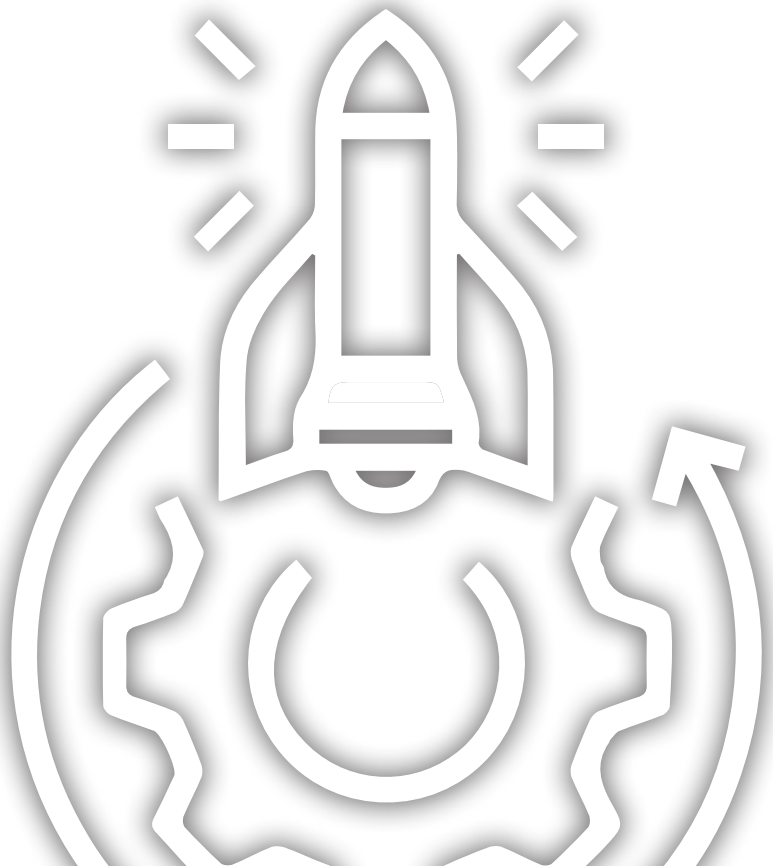

Transport

Large Diameter Piles

Cylinder Crowd System

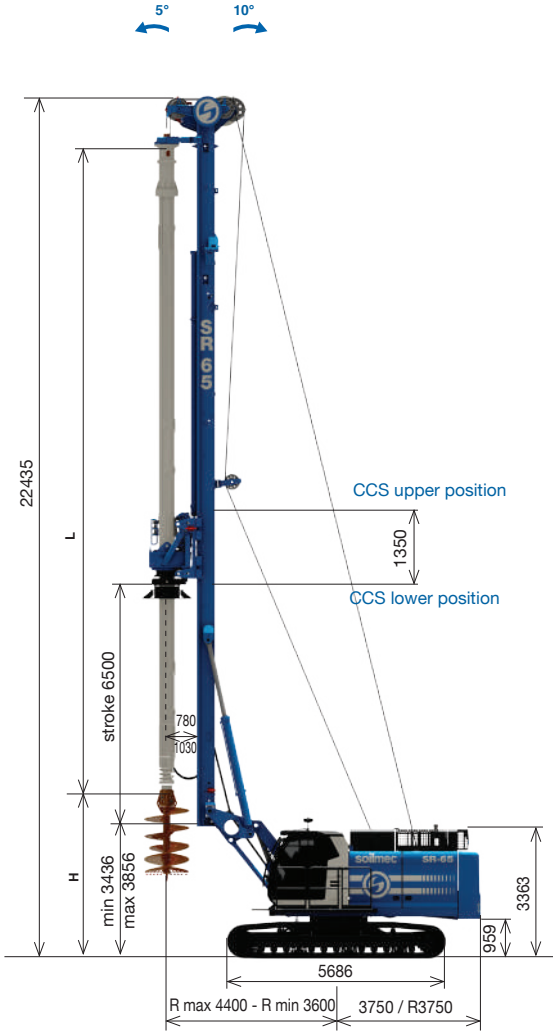

Winch Crowd System

Standard mast

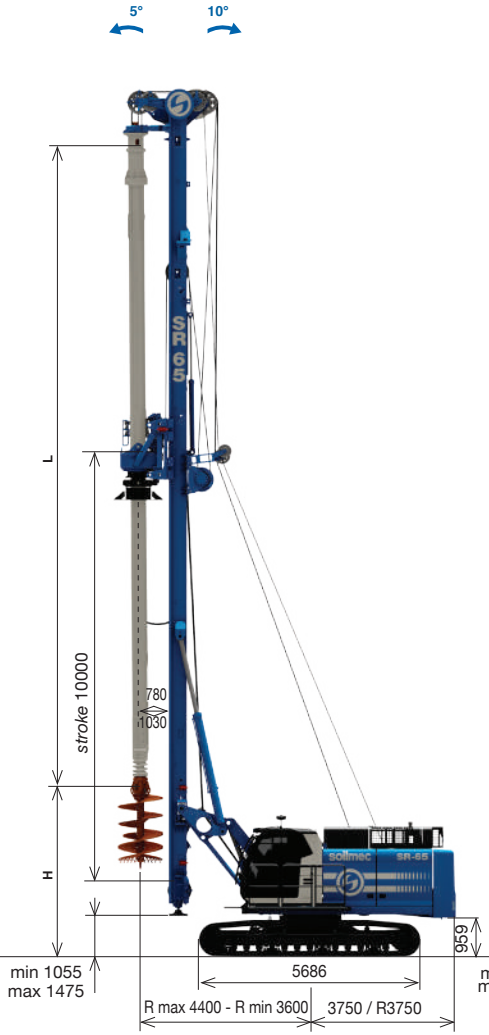

Segmental mast

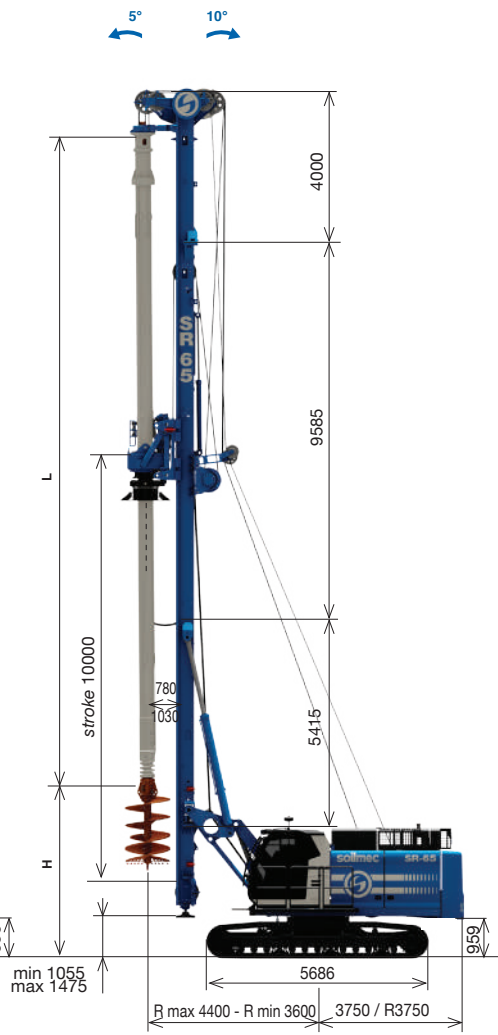

Low Head Room

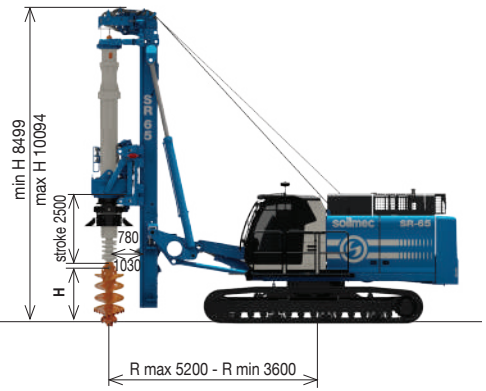

Drawing are not to scale All technical data are purely indicative and subject to change without notice

LDP - Large Diameter Piles - **CCS version**		
Operating weight w/o kelly bar [1 - 6]	**56500 kg**	*124560 lb*
Max pile diameter (tool along the mast)	**1500 mm**	*59 in*
Max pile diameter c/w increased drilling axis [2] (tool along the mast)	**2000 mm**	*79 in*
Max pile diameter w/o lower mast section (tool below the mast)	**3000 mm**	*118 in*
Working radius [3]	**3600 - 4400 mm**	*142 - 173 in*
Tail swing radius	**3750 mm**	*148 in*
Max pile depth - friction kelly	**77,9 m**	*256 ft*
Max pile depth - locking kelly	**62,5 m**	*205 ft*

LDP - Large Diameter Piles - **WCS version**		
Operating weight w/o kelly bar [1 - 7]	**58700 kg**	*129410 lb*
Max pile diameter (tool along the mast)	**1400 mm**	*55 in*
Max pile diameter c/w increased drilling axis [2] (tool along the mast)	**1900 mm**	*75 in*
Max pile diameter w/o lower mast section (tool below the mast)	**3000 mm**	*118 in*
Working radius [3]	**3600 - 4400 mm**	*142 - 173 in*
Tail swing radius	**3750 mm**	*148 in*
Max pile depth-friction kelly	**77,7 m**	*255 ft*
Max pile depth-locking kelly	**62,3 m**	*204 ft*

LHR - Large Diameter Piles - **CCS version**		
Operating weight w/o kelly bar [4]	**52900 kg**	*116625 lb*
Min / Max operating height [5]	**8,5 / 10**	*28 / 33 ft*
Cylinder crowd system stroke	**2500 mm**	*98 in*
Crowd force pull (down/up)	**140 / 280**	*31473 / 62945 lbf*
Max pile diameter along mast	**1500 mm**	*59 in*
Max pile diameter c/w increased drilling axis along mast	**2000 mm**	*79 in*
Max pile diameter w/o lower mast section, tool below mast	**3000 mm**	*118 in*

[1] Complete with engine Stage 5 version - In Tier3 version operating weight is reduced by 500 kg *(1102 lb)*
[2] Package on request
[3] Radius with increased drilling axis: 3850 - 4400 mm *(152 - 173 in)*
[4] For 1,5 m *(5 ft)* mast extension version weight increased by 650 kg *(1433 lb)*
[5] For 1,5 m *(5 ft)* mast extension version min/max operating height become 10 / 11,6 m *(33 / 38 ft)*
[6] For segmental mast version weight increased by 870 kg *(1918 lb)*
[7] For segmental mast version weight increased by 720 kg *(1587 lb)*

Kelly bars for LDP

	Kelly type	Kelly dimens.	Drilling [1-6] depth		Weight		L Length		H [7] CCS Low pos.		H [7] CCS High pos.		WCS	
			m	ft	ton	ton (US)	m	ft	m	ft	m	ft	m	ft
3 parts	BL HD	3 x 9	24,1	79.1	4,8	5.3	10,28	33.7	7.9	25.9	9.2	30.2	10.7	35.1
	BL HD	3 x 11,5	31,3	102.7	5,9	6.5	12,54	41.1	7.9	25.9	8.4	27.6	8.4	27.6
	BL HD	3 x 13,5	37,3	122.4	6,7	7.4	14,58	47.8	6.4	21.0	6.4	21.0	6.4	21.0
	BL HD	3 x 15,5	43,4	142.4	7,5	8.3	16,61	54.5	4.3	14.1	4.3	14.1	4.3	14.1
	BL HD	3 x 16,5	46,7	153.2	8,0	8.8	17,70	58.1	3.2	10.5	3.2	10.5	3.2	10.5
4 parts	BL HD	4 x 7,5	24,5	80.4	4,3	4.8	8,32	27.3	7,9	25.9	9,2	30.2	11,6	38.1
	BL HD	4 x 9	32,1	105.3	5,0	5.6	10,18	33.4	7,9	25.9	9,2	30.2	10,8	35.4
	BL HD	4 x 10,5	37,3	122.4	5,7	6.3	11,44	37.5	7,9	25.9	9,2	30.2	9,5	31.2
	BL HD	4 x 11,5	41,3	135.5	6,2	6.8	12,54	41.1	7,9	25.9	8,4	27.6	8,4	27.6
	BL HD	4 x 13,5	49,6	162.7	7,1	7.9	14,57	47.8	6,4	21.0	6,4	21.0	6,4	21.0
	BL HD	4 x 15,5	57,9	190.0	8,1	8.9	16,59	54.4	4,4	14.4	4,4	14.4	4,4	14.4
	BL HD	4 x 16,5	62,3	204.4	8,5	9.4	17,70	58.1	3,2	10.5	3,2	10.5	3,2	10.5
	FR HD	4 x 10,5	37,1	121.7	5,7	6.3	11,44	37.5	7.9	25.9	9,2	30.2	9,5	31.2
	FR HD	4 x 11,5	41,3	135.5	6,2	6.8	12,57	41.2	7.9	25.9	8,4	27.6	8,4	27.6
	FR HD	4 x 13,5	49,8	163.4	7,1	7.9	14,57	47.8	6.4	21.0	6,4	21.0	6,4	21.0
	FR HD	4 x 15,5	56,9	186.7	8,1	8.9	16,66	54.6	4.3	14.1	4,3	14.1	4,3	14.1
	FR HD	4 x 16,5	62,5	205.1	8,5	9.4	17,70	58.1	3.2	10.5	3,2	10.5	3,2	10.5
5 parts	FR HD [2]	5 x 10,5	46,4	152.2	6,1	6.8	11,32	37.1	7.9	25.9	9.2	30.2	9.6	31.5
	FR HD [2]	5 x 11,5	51,8	169.9	6,6	7.3	12,44	40.8	7.9	25.9	8.5	27.9	8.5	27.9
	FR HD [2]	5 x 12	53,7	176.2	6,8	7.5	13,02	42.7	7.9	25.9	7.9	25.9	7.9	25.9
	FR HD [2]	5 x 13,5	62,2	204.1	7,6	8.3	14,45	47.4	6.5	21.3	6.5	21.3	6.5	21.3
	FR HD [2]	5 x 14,5	66,2	217.2	8,1	8.9	15,33	50.3	5.6	18.4	5.6	18.4	5.6	18.4
	FR HD [2]	5 x 15,5	71,9	235.9	8,5	9.4	16,66	54.6	4.5	14.8	4.5	14.8	4.5	14.8
	FR HD [2]	5 x 16,5	77,7	254.9	9,0	9.9	17,58	57.7	3.4	11.2	3.4	11.2	3.4	11.2
LHR	BL HD [3]	4 x 4,5	13,2	43.3	3.0	3.3	5,5	18.0	1,64	5.4	3,23	10.6		
	BL HD [3]	4 x 5	15,6	51.2	3,2	3.5	6,08	19.9	1,04	3.4	2,64	8.7		
	BL HD [3]	4 x 5,5	17,6	57.7	3.4	3.7	6,6	21.6	0,54	1.8	2,14	7.0		
	BL HD [4]	4 x 6	19,2	63.0	3.7	4.1	7,0	22.9	1,64	5.4	3,23	10.6		
	BL HD [4]	4x 7	23,6	77.4	4.1	4.5	8,1	26.5	0,54	1.8	2,14	7.0		
	BL HD [5]	4 x 4,5	14,1	46.3	3.0	3.3	5,5	18.0	3,14	10.3	4,73	15.5		
	BL HD [5]	4 x 5,5	16,1	52.8	3.4	3.7	6,6	21.6	2,04	6.7	3,64	11.9		
	FR HD [3-2]	5 x 4,5	17,1	56.1	3,2	3.5	5,5	18.0	1,64	5.4	3,23	10.6		
	FR HD [3-2]	5 x 5,5	22,5	73.8	3,7	4.1	5,6	21.6	0,54	1.8	2,14	7.0		
	FR HD [4-2]	5 x 6	24,6	80.7	4,0	4.4	7,0	22.9	1,64	6.4	3,23	10.6		
	FR HD [4-2]	5 x 7	30,0	98.4	4,4	4.9	8,1	26.5	0,54	1.8	2,14	7.0		
	FR HD [5-2]	5 x 5	18,5	60.7	3,5	3.9	6,1	19.9	2,54	8.3	4,14	13.6		
	FR HD [5-2]	5 x 5,5	21,0	68.9	3,7	4.1	6,6	21.6	2,04	6.7	3,64	11.9		

[1] *In **CCS version** w/o lower mast element, drilling depth reduced by -1300 mm (4.26 ft); in **WCS version,** drilling depth reduced by -200 mm (0.65 ft); in **WCS version** w/o lower mast element, drilling depth reduced by -1600 mm (5.24 ft); with kelly c/w stub 200x200, depth reduced by -200 mm (0.65 ft); drilling depth with tool 1500 mm (4.9 ft) long.*
[2] *Rotary head derate*
[3] *LHR standard version. Operating height max 8,5 m (28 ft)*
[4] *LHR mast extended version. Operating height max 10 m (32.8 ft) with CCS in low position*
[5] *LHR mast extended version. Operating height max 10 m (32.8 ft) with CCS in high position*
[6] *Drilling depth are referred to R max, with R min the drilling depth reduced by - 1,6 m (5.2 ft)*
[7] *The H value for the LHR version are refferd to R max - R min*

CFA / DP / TJ applications

CFA / DTH 4-lines pull

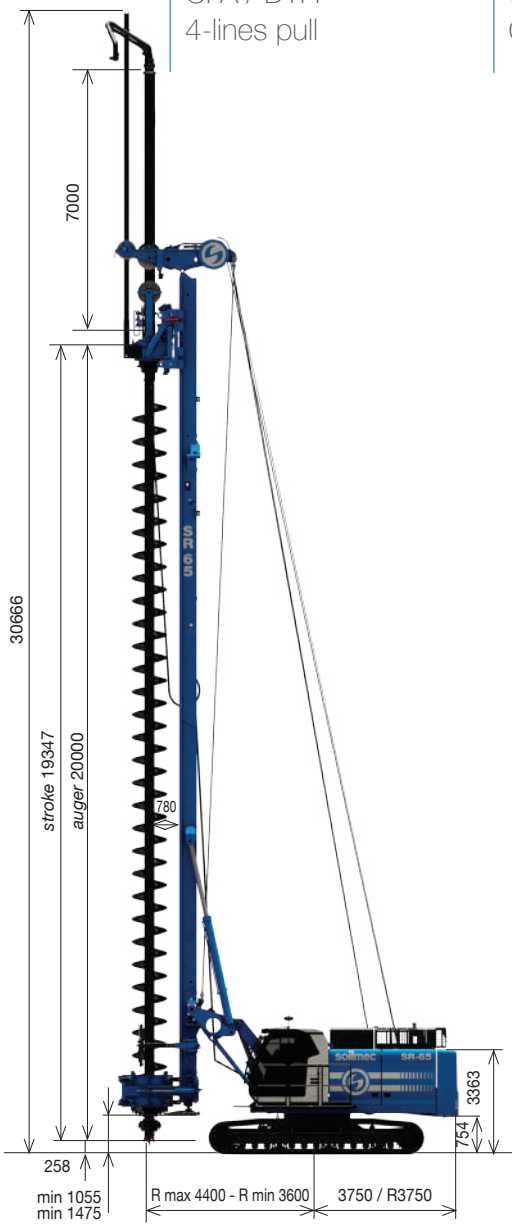

CFA Quick Change

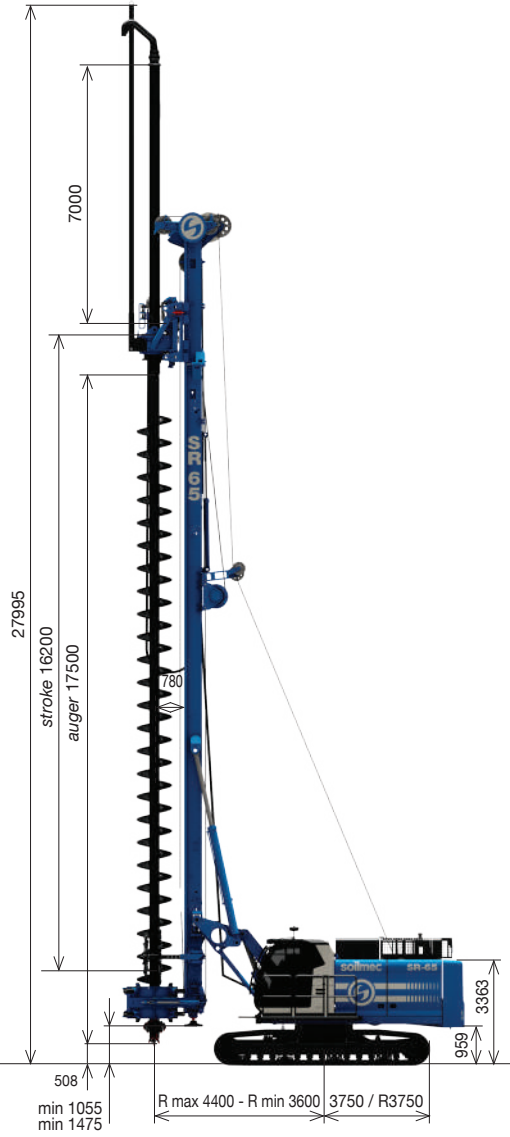

CFA Direct Pull

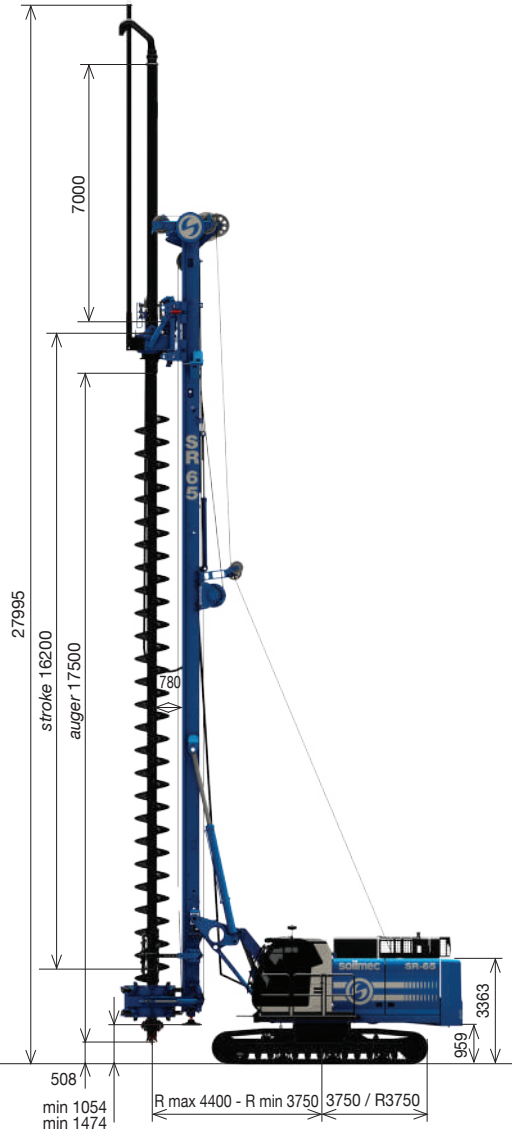

DP / TCT Quick Change

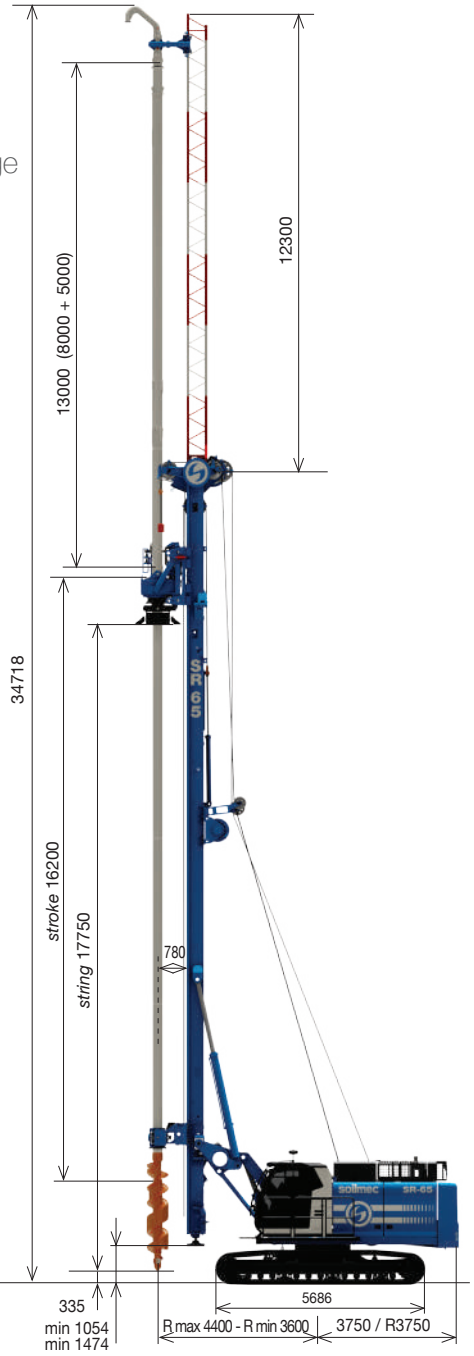

Drawing are not to scale All technical data are purely indicative and subject to change without notice

TJ
Quick Change

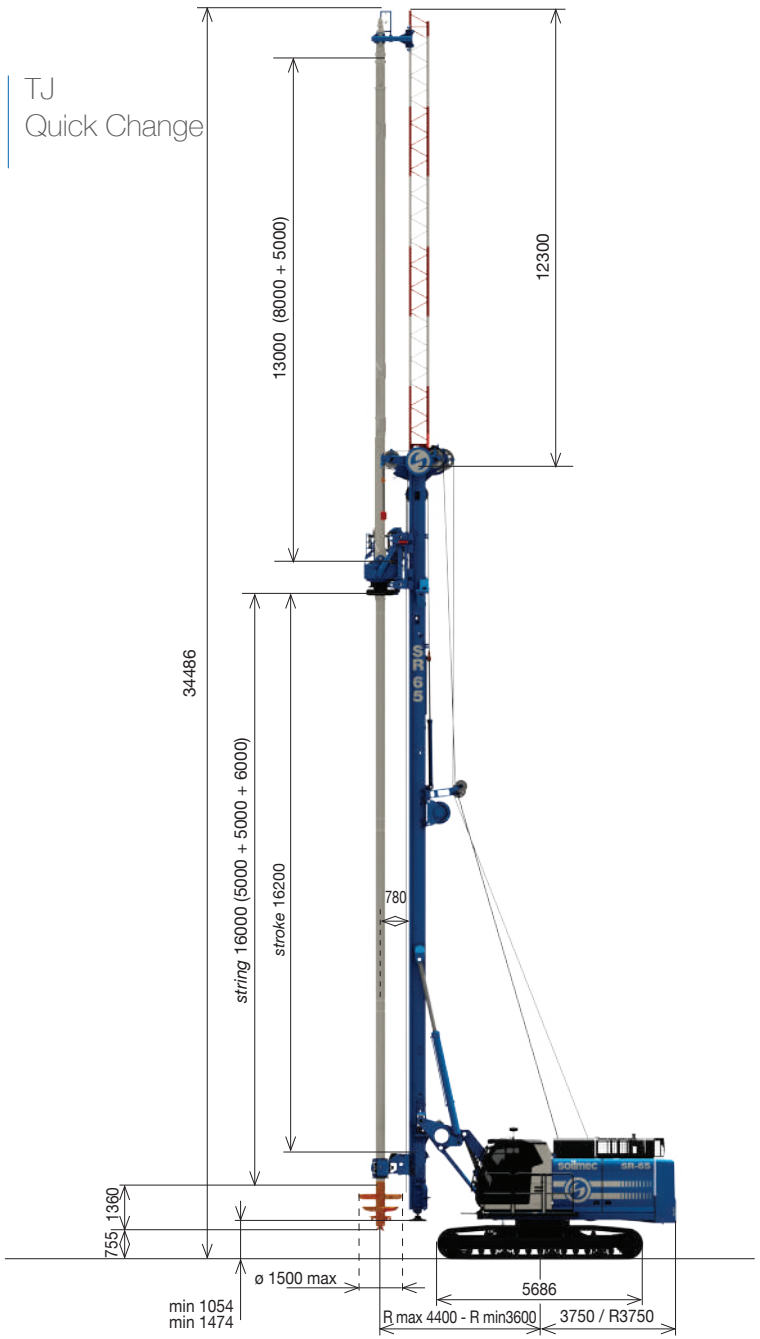

CFA / DTH - Continuous Flight Auger / Down The Hole- 4-**lines pull**	standard version		extended version [5]	
Operating weight (c/w 1100 kg - 2425 lb auxiliary cwt, 7 m - 23 ft sleeve extension, w/o auger) [6]	**61200 kg**	*134922 lb*	**63000 kg**	*138890 lb*
Max pile diameter	**1200 mm**	*47 in*	**750 mm**	*30 in*
Max diameter DTH	**105 mm**	*4 in*	**105 mm**	*4 in*
Max length of auger	**20 m**	*66 ft*	**23 m**	*75 ft*
Max length of sleeve extension	**8 m**	*26 ft*	**8 m**	*26 ft*
Max pile depth (c/w 8 m - 26 ft sleeve extension) [1]	**26,9 m**	*88 ft*	**30 m**	*98 ft*
Nominal extraction force	**620 kN**	*139379 lbf*	**450 kN**	*101162 lbf*
Additional crowd force on auger [2]	**150 kN**	*33721 lbf*	**150 kN**	*33721 lbf*

CFA - Continuous Flight Auger - **Quick change**	standard version
Operating weight (c/w 7 m - 23 ft sleeve extension, w/o auger) [7]	**60500 kg** *133378 lb*
Max pile diameter	**1200 mm** *47 in*
Max length of auger	**17,5 m** *57 ft*
Max length of sleeve extension	**8 m** *26 ft*
Max pile depth (c/w 8 m - 26 ft sleeve extension) [1]	**23,5 m** *77 ft*
Nominal extraction force	**550 kN** *123643 lbf*
Nominal crowd force on auger	**330 kN** *74186 lbf*

CFA - Continuous Flight Auger - **Direct Quick change**	standard version
Operating weight (c/w 7 m - 23 ft sleeve extension, w/o auger) [7]	**60500 kg** *133378 lb*
Max pile diameter	**1200 mm** *47 in*
Max length of auger	**17,5 m** *57 ft*
Max length of sleeve extension	**8 m** *26 ft*
Max pile depth (c/w 8 m - 26 ft sleeve extension) [1]	**23,5 m** *77 ft*
Nominal extraction force	**330 kN** *74186 lbf*
Nominal crowd force on auger	**330 kN** *74186 lbf*

DP/TCT - Displacement Pile - **Quick change** [4]	standard version
Operating weight (w/o string and tool) [7]	**60500 kg** *133378 lb*
Max recommended DP pile diameter	**600 mm** *24 in*
Max recommended TCT pile diameter	**800 mm** *31 in*
Max length of string	**17,7 m** *58 ft*
Max pile depth w/o lattice boom extension c/w 8 m (26 ft) string ext.	**23,5 m** *77 ft*
Lattice boom extension length	**12,3 m** *40 ft*
Max pile depth c/w lattice boom extension	**28,5 m** *94 ft*

TJ - Turbojet ® - **Quick change** [4]	standard version
Operating weight (w/o string and tool) [7]	**60500 kg** *133378 lb*
Max recommended TJ pile diameter [3]	**1400 mm** *55 in*
Max length of string	**17,5 m** *57 ft*
Max pile depth w/o lattice boom extension c/w 6 m (19.6 ft) string ext.	**21,2 m** *70 ft*
Lattice boom extension length	**12,3 m** *40 ft*
Max pile depth c/w lattice boom extension	**28,2 m** *93 ft*

[1] depth reduced of 1,3 m (4.3 ft) with roller auger cleaner
[2] package on request - depth reduced by 0,6 m (2 ft)
[3] Ø 1900 mm (75 in) in ECTW configuration
[4] DP/TCT and TJ are also available with 4-lines pull version or Direct Quick change
[5] by a special kit on request
[6] for segmental mast version weight increased by 870 kg (1918 lb)
[7] for segmental mast version weight increased by 720 kg (1587 lb)

CSP/ VDW applications

Quick Change

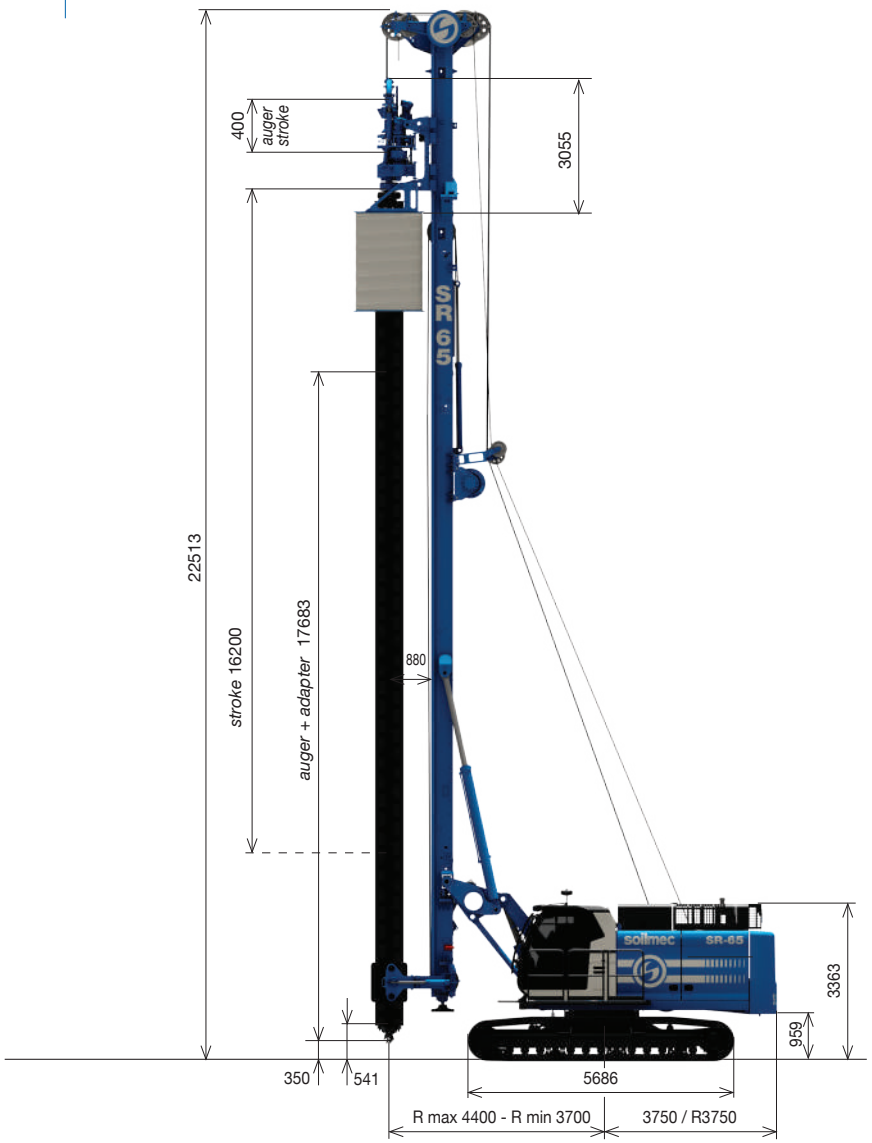

VDW 1005 - Cased Secant Piles - **Quick change**		standard version
Operating weight (w/o auger and casing)	**65600 kg ***	*144623 lb **
Max pile diameter	**610 mm**	*24 in*
Max augered depth	**15,7 m**	*52 ft*
Max cased depth	**15,5 m**	*51 ft*
Casing max torque	**98,5 kNm**	*72649 lb*ft*
Max casing speed rotation	**15 rpm**	*15 rpm*
Auger max torque	**49,3 kNm**	*36361 lb*ft*
Max auger speed rotation	**30 rpm**	*30 rpm*
Nominal auger pull up/down	**500 / 250 kN**	*112403 / 56201 lbf*
Nominal casing pull up/down	**500 / 250 kN**	*112403 / 56201 lbf*

VDW 1407 - Cased Secant Piles - **Quick change**		standard version
Operating weight (w/o auger and casing c/w additional counterweight)	**67400 kg ***	*148591 lb **
Max pile diameter	**610 mm**	*24 in*
Max augered depth	**15,7 m**	*52 ft*
Max cased depth	**15,5 m**	*51 ft*
Casing max torque	**140 kNm**	*103259 lb*ft*
Max casing speed rotation	**10,7 rpm**	*10.7 rpm*
Auger max torque	**70 kNm**	*51629 lb*ft*
Max auger speed rotation	**21,4 rpm**	*21.4 rpm*
Nominal auger pull up/down	**500 / 250 kN**	*112403 / 56201 lbf*
Nominal casing pull up/down	**500 / 250 kN**	*112403 / 56201 lbf*

* For segmental mast version weight increased by 720 kg (1587 lb)

Drawing are not to scale. All technical data are purely indicative and subject to change without notice.

Rotary

Increased drilling axis

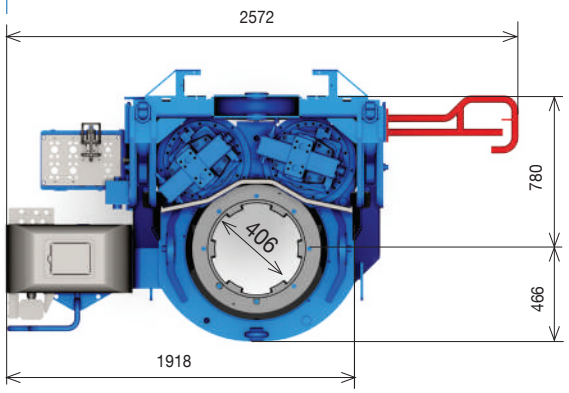

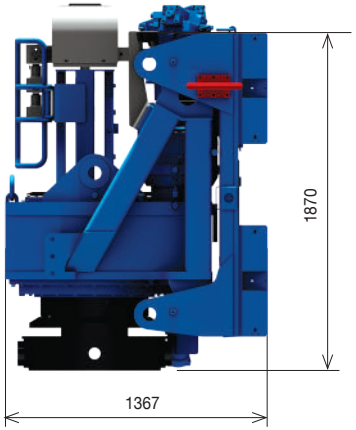

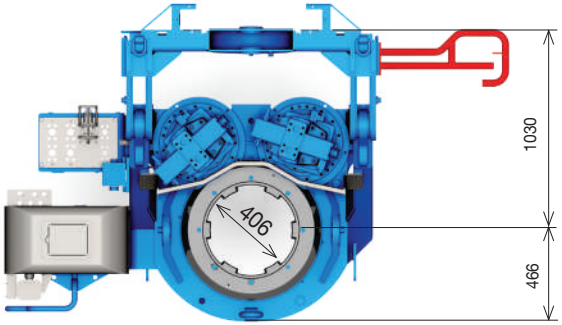

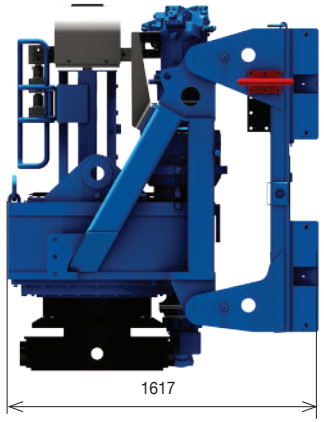

Rotary		
Type	**Spin-off type**	*Spin-off type*
Max torque *(intermittent)*	**258,5 kNm**	*190657 lbf*ft*
Rated torque	**240 kNm**	*177012 lbf*ft*
Max drilling speed	**36,8 rpm**	*36.8 rpm*
Spin off speed	**135 rpm**	*135 rpm*
Weight *(w/o cradle, casing flange and cardan joint)*	**~ 3250 kg**	*~ 7165 lbs*

Rotary torque diagram

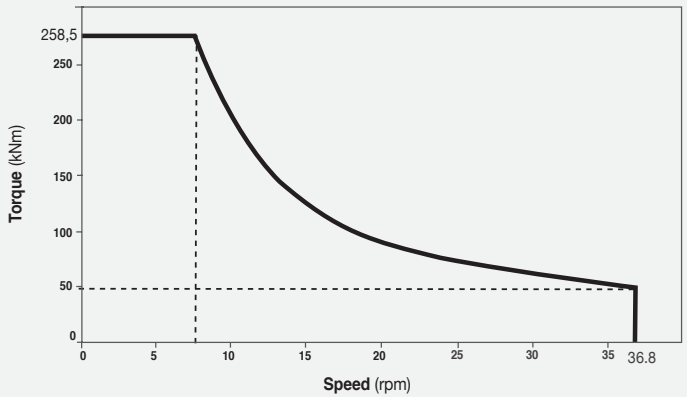

The new rotary design allows reducing the transport height and at the same time guarantees the flexibility of using the same 406 mm/15.6 in kelly bar of other Soilmec rigs.

The easy replacement of the rotary sleeve and pads have been purposely designed for the specific needs of the job site.

The rotary implements with a new device that allows the automatic control of the motor displacement. This optimizing the drilling speed and the productivity in every phase.

The variable drilling axis device (from 780 mm to 1030 mm / 30.7 in to 40.6 in) ensures the maximum geometric clearance in front of the mast.

Transport

Dimensions and Weights

Winch Crowd System

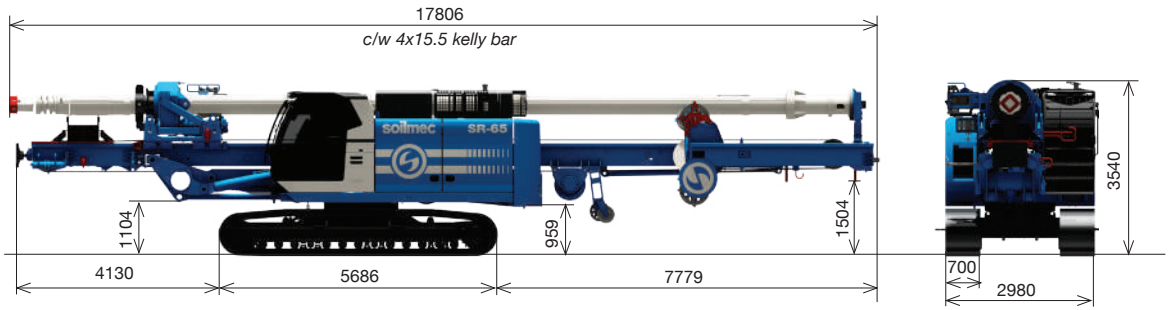

Transport standard LDP version		CCS		WCS
Weight with standard mast	**63600 kg**	*140214 lbs*	**65800 kg**	*145064 lbs*
Weight with segmental mast	**64470 kg**	*142132 lbs*	**66520 kg**	*146651 lbs*
Length c/w kelly bar <14 m (46 ft)	**17600 mm**	*57.7 ft*	**17600 mm**	*57.7 ft*

Includes base carrier Stage V, complete rotary, counterweight, kelly bar 4x13,5m, w/o tool.

4-lines pull
Standard version

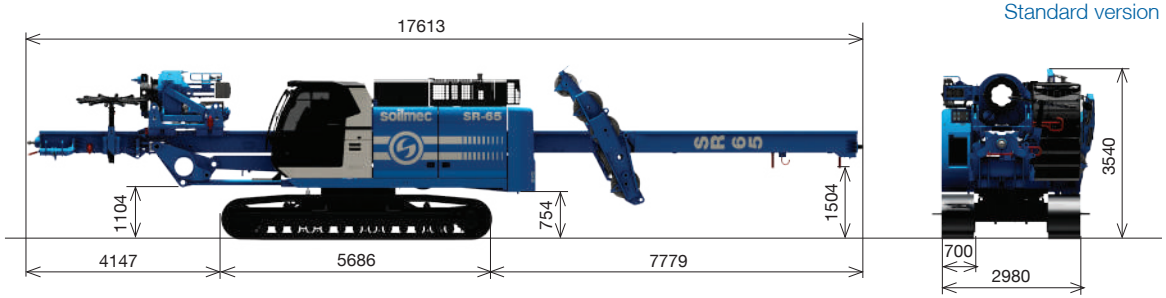

Transport standard CFA version		4-lines pull		Quick change
Weight with standard mast	**58300 kg**	*140214 lbs*	**57600 kg**	*145064 lbs*
Weight with segmental mast	**59170 kg**	*130447 lbs*	**58320 kg**	*128573 lbs*
Length	**17613 mm**	*57.8 ft*	**17600 mm**	*57.7 ft*

Includes base carrier Stage V, complete rotary, w/o auger, w/o sleeve extension, w/o hydraulic guide, w/o auger cleaner

Drawing are not to scale All technical data are purely indicative and subject to change without notice

Transport

The impossible has been realized by the talent of our engineers. We have been able to design a rig which goes beyond all the limits in its class.

All SR-65 can be transported in a single load, improving productivity and efficiency even before starting to drill.

Transport weight in single load with kelly bar mounted: 64 tons (142,000 lb).

The maximum height while transported on truck is 4400 mm (14.5 ft).

Thanks to a special optional, the new SR-65 can also reach the weight of 49.9 tons (110,000 lbs) by removing the counterweight and the kelly bar which does not need any auxiliary lifting equipment.

Soilmec is well aware of the job site needs and of importance of the start-up times.

The SR-65 is designed to ensure the machine starts drilling operations (in standard configuration) 30 minutes from the arrival at your job site.

Moreover the SR-65 set in segmantal mast version with removable sides undercarriage is able to get an exceptionally minimum transport weight of not even 30 tons (66000 lb).

Self mounting counterweight (optional package)

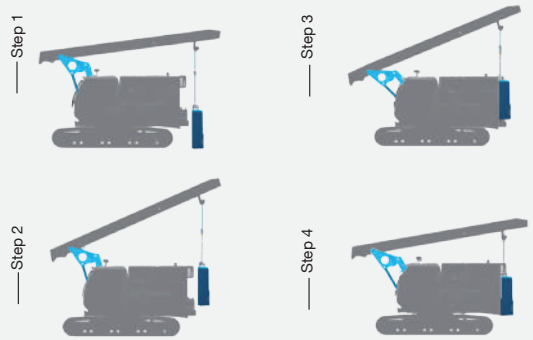

LHR version

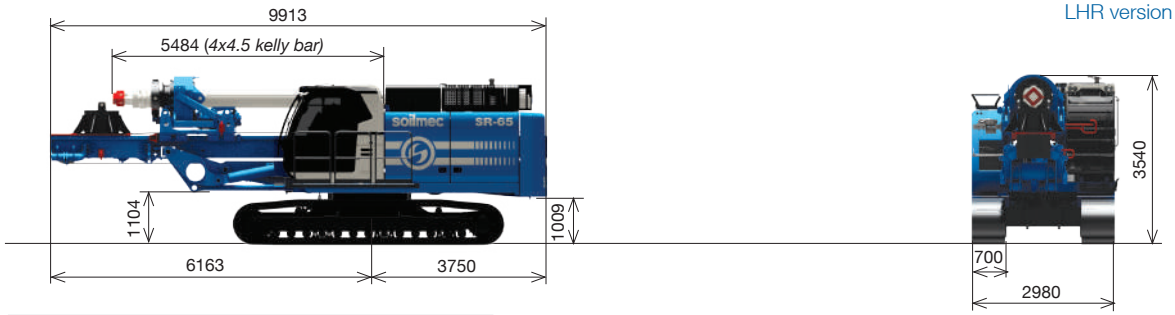

Transport standard LHR version	8,5 m version		10 m version	
Weight	**55900 kg**	*123238 lbs*	**56550 kg**	*124671 lbs*
Min. weight *	**47200 kg**	*104058 lbs*	**47850 kg**	*105491 lbs*
Length	**9893 mm**	*32.5 ft*	**9893 mm**	*32.5 ft*

Includes base carrier Stage V, complete rotary, counterweight, kelly bar 4x4,5m, w/o tool.
** w/o kelly and kelly guide, w/o rotary, w/o rotary cradle, c/w counterweight*

Special undercarriage version

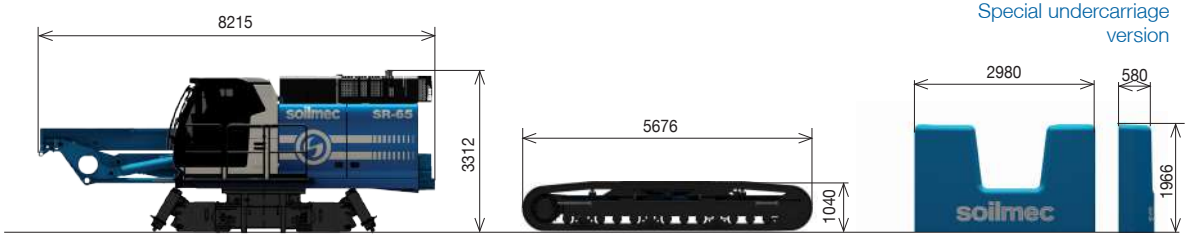

Transport - **CCS version** - Segmental mast - Special undercarriage - Main parts		
Main frame - Base machine weight	**29150 kg**	*64265 lb*
Mast weight c/w support	**5720 kg**	*12610 lb*
Kelly bar 4x9 c/w guide for variable drilling axis weight	**5500 kg**	*12125 lb*
Undercarriage side frames	**2 x 6100 kg**	*2 x 13448 lb*
Counterweight weight	**7500 kg**	*16535 lb*
Rotary weight c/w support	**5210 kg**	*11486 lb*
Flange	**550 kg**	*1213 lb*
Mast foot	**450 kg**	*992 lb*
Additional counterweight	**200 kg**	*441 lb*

Main parts

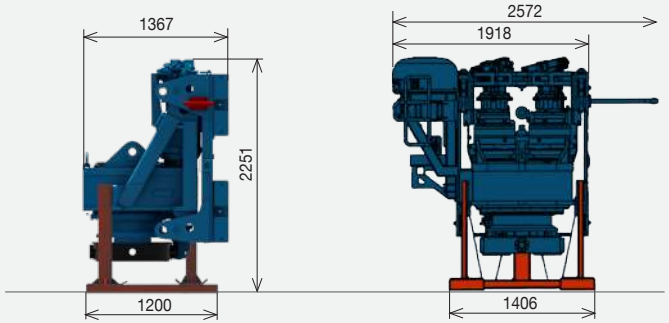

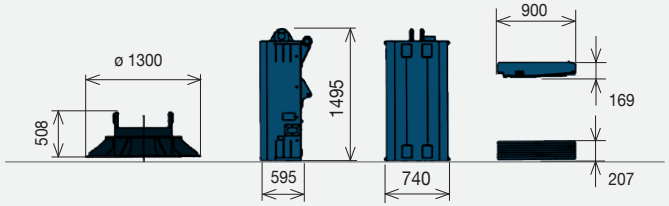

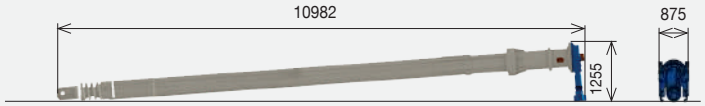

Technical data

Undercarriage

Especially designed for heavy duty applications that require less penetration, better turning capability and less ground disturbance. Maintenance-free crawler track. Hydraulic chain tensioning device.

Undercarriage		
- Type [1]	variable gauge, telescoping sides frames	*variable gauge, telescoping sides frames*
- Overall width retracted / extended crawlers	**2980 / 4500 mm**	*117 / 177 in*
- Width of triple grouser track shoes	**700 mm**	*28 in*
- Overall length of crawlers	**5686 mm**	*224 in*
- Traction force	**395 kN**	*88798 lbf*
- Travelling speed	**1,8 km/h**	*1.1 mph*

[1] *Special undercarriage c/w removable side frames available on request, dimension 750x4450x5676 mm (30x175x223 in)*

Engine

Engine		
- Model [2]	**Cummins L 9**	*Cummins L 9*
- Power rating [3]	**272 kW @ 2100 rpm**	*365 HP @ 2100 rpm*
- Engine conforms to Exhaust emission Standard	**EU Stage V / US EPA Tier 4f**	*EU Stage V / US EPA Tier 4f*
- AD Blue tank capacity	**57 l**	*15 US gal*
- Fuel tank capacity	**500 l**	*132 US gal*

[2] *Cummins QSL 9 - US EPA Tier0 available on request - power rating 317 kW (425 HP) with air compressor*

[3] *Max power available 283 kW (380 HP) @ 1800 rpm*

Hydraulic system

The cleaning of hydraulic oils is electronically monitored and any clogging is show to operator on DMS control system in the cab.

Hydraulic system		
- Main pump flow	**2 x 294 l/min**	*2x 77.6 gal/min*
- Auxiliary pump flow	**160 l/min**	*42.2 gal/min*
- Hydraulic oil tank	**600 lt**	*1582 min*

Crowd system

CCS Cylinder Crowd System		
- Stroke	**6500 mm**	*256 in*
- Crowd force pull (down/up)	**140 / 280 kN**	*31473 / 62945 lbf*
- Speed up	**16,3 m/min**	*53 ft/min*
- Speed down (slow/fast)	**9,1 / 20,4 m/min**	*30 / 67 ft/min*
WCS Winch Crowd System		
- Stroke	**16200 mm**	*740 in*
- Crowd force pull (down/up)	**330 / 330 kN**	*74186 / 74186 lbf*
- Speed up (slow/fast)	**15,5 / 34 m/min**	*51 / 112 ft/min*
- Speed down (slow/fast)	**15,5 / 34 m/min**	*51 / 112 ft/min*

WCS rotary stroke reduced to 8650 mm (28.4 ft) w/o mast foot

Winches

Main winch		
- Type	**control descent**	*control descent*
- Line pull (1st layer)	**220 kN**	*48510 lbf*
- Rope diameter	**26 mm**	*1.02 in*
- Line speed (max.)	**84 m/min**	*275 ft/min*
Auxiliary winch		
- Type	**control descent**	*control descent*
- Line pull (1st layer)	**83 kN**	*18301 lbf*
- Rope diameter	**19 mm**	*0.75 in*
- Line speed (max.)	**76 m/min**	*249 ft/min*

Noise

Noise		
- Sound pressure level in cab c/w Stage V Engine	**77 dB(A)**	*77 dB(A)*
- Sound power level c/w Stage V Engine	**106 dB(A)**	*106 dB(A)*
- Vibration transmitted to the hand-arm system of the machine operator	**< 2.5 m/s²**	*< 2.5 m/s²*
- Vibration transmitted to the whole body of the machine operator	**< 0.5 m/s²**	*< 0.5 m/s²*

H-cab

Soilmec new cab. By assessing the specific application and listening properly to the wishes and requi-ments of the operators, Soilmec provides the optimal operator cabin for comfort. Ergonomic seat with air suspension, fully adjustable, lumbar support, air management, as well as lines of sight, quality and safety are standard aspects considered during the design of the right configuration for the cabin.

- Cabin width	**1050 mm**	*3.4 ft*
- Sliding door		
- Courtesy lights		
- Air conditioning system and climate control unit		
- Radio player with USB aux port		

Controls

DMS control system, developed and manufactured by Soilmec - is designed to give you a total control over performance, production and all your drilling rigs. In real time all the information relating to the operation work cycles and diagnostics of faults are shown on a multilanguage touch screen display installled in the cab.
All drilling operations are actuated by two innovative joysticks.
Automatic controls of rotary head and drilling phases are available on request thanks to simple· imple-mentation of our DMS system.

Configurations

UNDERCARRIAGE	
Variable gauge, telescopic side frames	●
Variable gauge, telescopic removable side	○
Machine anchor points for transport	●
Mechanical prearrangement for casing oscillator	●
Hydraulic prearrangement for casing oscillator	○
VRM120KL casing oscillator	○
VRM150KL casing oscillator	○
Radio remote control for tramming operation	●
UPPER STRUCTURE	
Diesel engine QSL L9 EU Stage IIIA – US EPA Tier 0	○
Diesel engine QSL L9 EU Stage IIIA – US EPA Tier 3	○
Diesel engine L9 EU Stage V – US EPA Tier 4F	●
Start and slow system	●
Harness technology for electrical system	●
Automatic Greasing package	○
PTO kit for washing lancer	○
Self-mountig counterweight	○
Catwalks for centre of turret	●
Compressor kit	○
Rear ladder for torret access	●
Foaldable side catwalks for cabin	●
Machine lifting kit (harbor use)	○
Foldable catwalk with handrails	●
Acoustic & light alarm for tramming	●
Lighting led system package	●
Sound proofed canopies	●
CAB	
Front protective grille	●
Falling object protective structure (FOPS)	●
Rearview mirrors	●
Comfort packakge (cup holder, radio, A/C system, USB port & 12 V power socket, roll-up awning, courtesy lights)	●
Operator seat (air suspension, lumbar support, fully adjustable positioning, safety belt & operator presence micro-switch)	●
Front tools support	○
Service rope holder	○

* *The technology package is only referred to the machine set up in this specific version*

Lighting system in front of the cab	●
CONTROL AND MONITORING SYSTEM	
DMS ON BOARD with technological package	●
DMS PC	●
DMS manager 4.0	○
GSM / GPRS / WIFI Modem	●
PLC processor for electrically actuated functions	●
DMS ON BOARD adjustable monitor 12" touch screen	●
Video control by 4 cameras with display in the cab	●
WINCHES	
Main winch SW220 model	●
Load cell for main winch	○
Main & service winch pull instant value displayed on DMS On Board	○
Limit switch for rope winding and winches	●
Depthmeter for main winch	●
Anti-slack system for main winch	○
Service winch SW100 model	●
Load cell for service winch	●
ROTARY UNIT	
RD240 model - Max torque intermitted: 258.5 kNm (*180659 lbs*ft*)	●
RD240G with gear box model - Max torque intermitted: 271 kNm (*199879 lbs*ft*)	○
Interchangeable rotary sleeve	●
Quick disassembling rotary kit	○
Automatic greasing kit for cradle	●
Automatic control of motor displacement	●
Oil discharge conveying system	●
MAST	
Segmental mast	●
Monolithic mast	○
Mast guide cleaner	○
Kit for assisted rasing mast *(patented)*	○
Lower foldable mast element	●
Hydraulic cathead folding kit	○
Cathead greasing kit	○
Double positioning of cylinder (n.a. in LHR version)	●
KELLY BAR TECHNOLOGY	
Rotary sleeve with 3 ribs	●

Rotary sleeve with 6 ribs	○
Spin off discharging system	●
"Click-click" discharging system	○
Cardan joint	●
Flange for casing driving d.1300 mm *(51.1 in)*	●
Flange for casing driving d.1500 mm *(59 in)*	○
Flange for casing driving d.1700 mm *(66.9 in)*	○
Variable drilling axle	●
Automatic return to the centre hole	○
Kelly bar guide	●
Air compressor kit	○
OTHER TECHNOLOGY	
Sleeve 6 m (19.7 ft) long XHD-5 or 25HD-5	●
Sleeve 7 m (23 ft) long XHD-5 or 25HD-5	●
Sleeve 8 m (27.8 ft) long XHD-5 or 25HD-5	●
Package for CFA std & direct quick change 17,5 m (57 ft) auger length	●
Package for CFA 4-lines pull 20 m (66 ft) auger length	●
Package for CFA 4-lines pull 23 m (75 ft) auger length	●
DMS ON BOARD with automatic auger lifting	●
Autodrilling package	●
Autorotary package	●
CFA 4-lines pull additional pull-down winch 100 kN (22481 lbf)	●
Hydraulic universal openable lower guide d.1200mm (47.2 in)	●
Auger cleaner star type	●
Double roller auger cleaner d.1200 mm (47.2 in)	●
Two pressure transducers kit	●
WiFi sensore for concrete pressure	●
Warning system for CFA sleeve extension coupling *(patent pending)*	●
Hydraulic prearrangement for VTH-1 vibrator	●
Add. package for VDW technology 15,5 m (51 ft) cased depth	●
Add. package for VDW 1005	●
Add. package for VDW 1407	
Add. package for DP/TCT technology 28,5 m (95 ft) depth with lattice ext.	●
Add. package for TJ technology 28,2 m (93 ft) depth with lattice ext.	●
Add. package for ECTW - Direct pull configuration	●

● standard ○ optional

www.soilmec.it

This brochure has been edited and distributed by SOILMEC Spa. The present document cancels and override any previous ones. This brochure shall not be distributed, reproduced or exhibited without SOILMEC Spa. authorization in accordance with to SOILMEC web site disclaimer condition.

SOILMEC Spa distributes machinery and structures all over the world, supported by SOILMEC Spa subsidiary companies and dealers.
The complete Soilmec network list is available on the web site www.soilmec.it

#muddyboots

Technical data sheet SR-65 BLUE TECH - EN - 002- 12/2020